WU-M-584

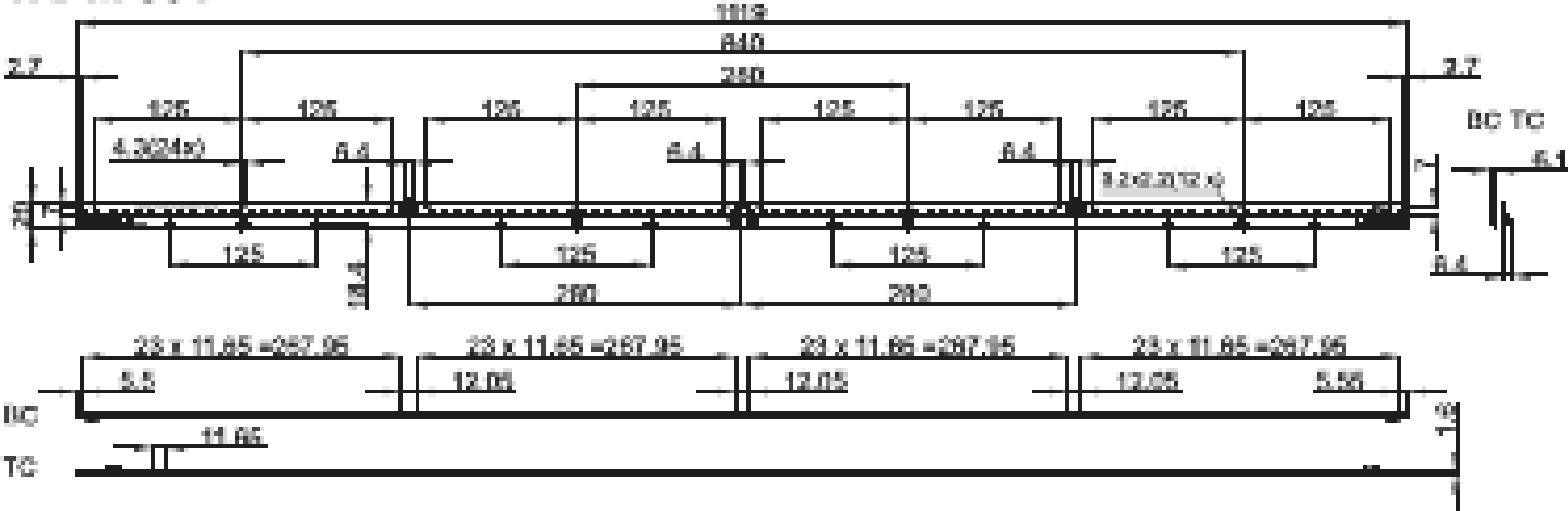
1119
840
280
2.7
2.7
125
125
125
125
125
125
125
125
4.3(24x)
8.4
8.4
8.4
9.2x2.2(12 x)
BC TC
7
6.1
8.4
125
125
125
125
18.4
280
280
23 x 11.65 =267.95
23 x 11.65 =267.95
23 x 11.65 =267.95
23 x 11.65 =267.95
5.5
12.05
12.05
12.05
5.55
BC
TC
11.65
19